Jacket 316-264

Attachment 1

Item 5

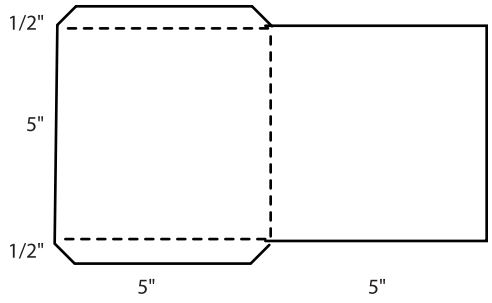

Item 2

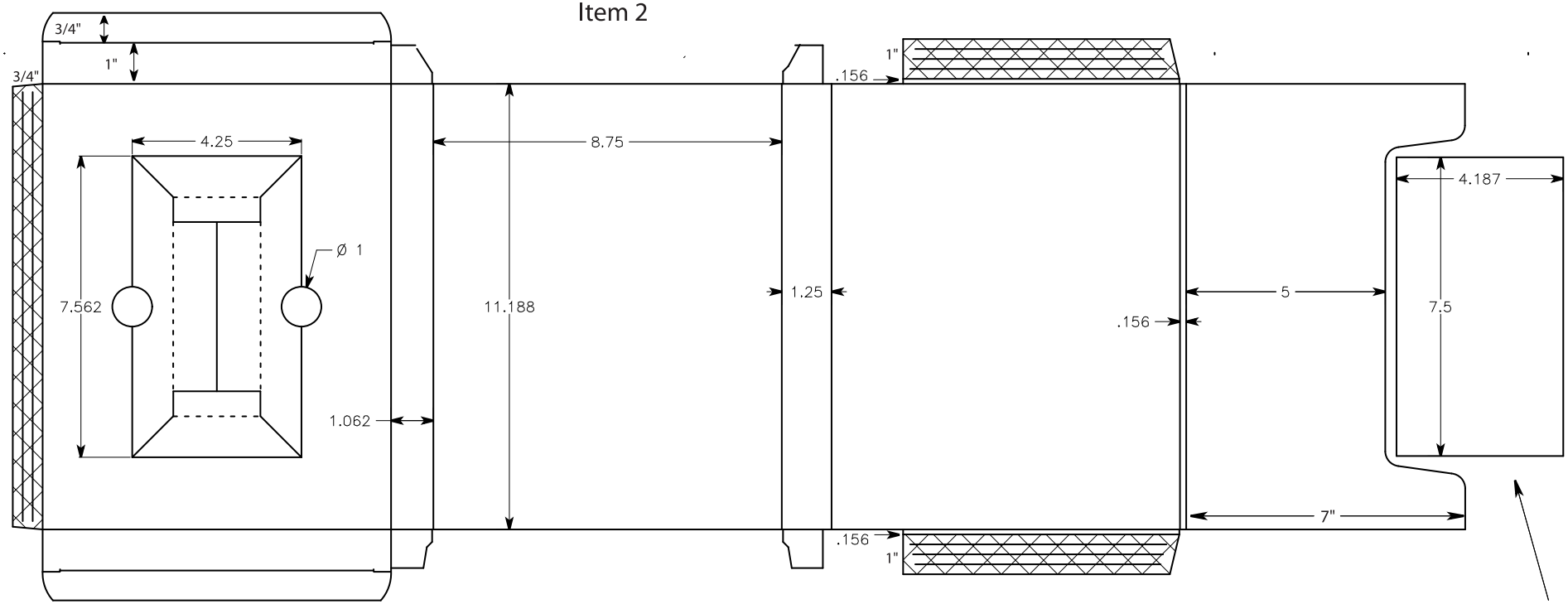

Additional Sheet above is to be placed securely in the bottom of the video casette holder portion to the left.

Note: Measurements are approximate. Contractor to follow furnished ecletronic media.